REVISONS			
REV	DESCRIPTION	DATE	APPR
1.00	初版	12/25	
2.00	CFAST,J4,P13,P14変更 寸法値変更無し	01/07	

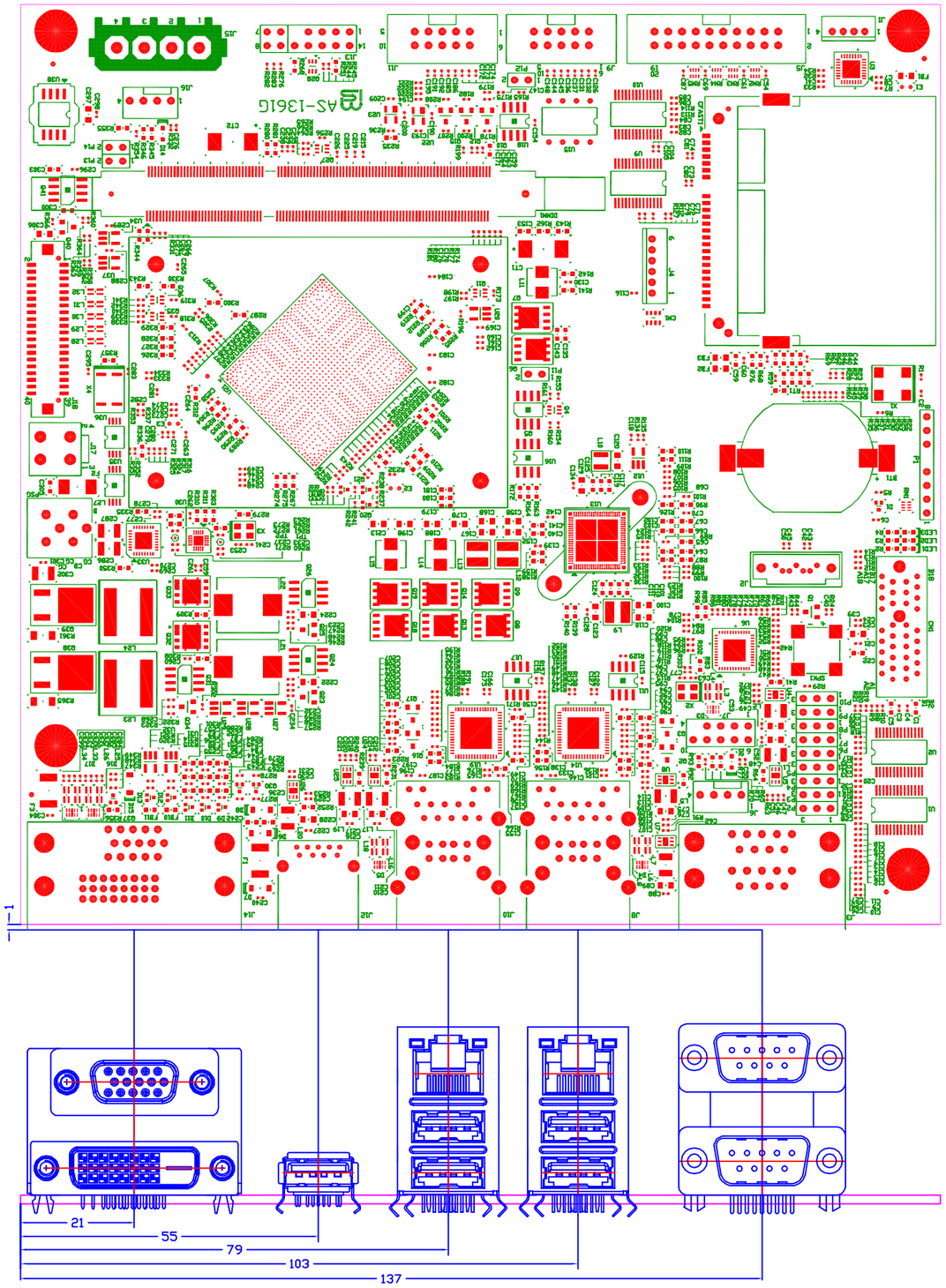

ITEM	DESCRIPTION	REF.DESIGNATION		
D	2400752		REV 2.00	SMT 1/2

Y.oonuma	2015-01-07	AS-1361G パネル側寸法図
Y.oonuma	2013-12-25	
SCALE 1/1	UNIT mm	TOLERANCES ±0.254

mis

REVISONS			
REV	DESCRIPTION	DATE	APPR

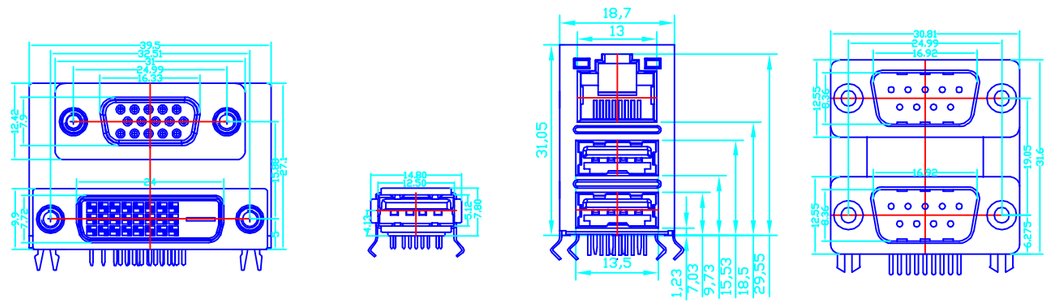

ITEM	DESCRIPTION	REF.DESIGNATION	
D	2400752	REV 2.00	SMT 2/2

Y.oonuma	2015-01-07
Y.oonuma	2013-12-25

SCALE	UNIT	TOLERANCES
1/1	mm	±0.254

AS-1361G
パネル側寸法図

mis